Pressure regulator U23AC

spectrotec



U23AC for acetylene

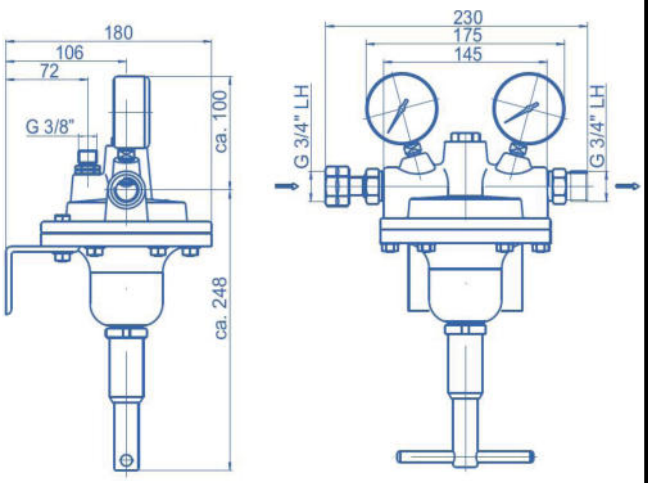

Dimensions

with wall bracket
723 16762

Product features

- Diaphragm line pressure regulator
- Specially for acetylene
- For flow rates up to 12 m³/h acetylene
- Single-stage with high control accuracy
- Central filter in the pressure regulator
- Safety pressure gauge acc. to DIN ISO 5171
- Pressure regulator with integrated relief valve
- Wall bracket as accessory available

Technical data

Type	single-stage
Flow rate Q	max. 12 m³/h
Inlet pressure P_1	max. 1.5 bar
Outlet pressure P_2	max. 1.5 bar
Materials	
Body:	brass
Bonnet:	Alu, powder coated
Valve seat:	PA
Diaphragm:	EPDM
Connections	
Inlet (bull nose):	G 3/4“ LH nut
Outlet (bull nose):	G 3/4“ LH male
Pressure gauge ports:	G 1/4” female
Outlet relief valve:	G 3/8” male
Temperature range	-20°C to +60°C
Leak rate	≤10^{-4} mbar l/s He
Weight	ca. 6.5 kg

Flow rates and Performance factor

U23AC	Flow rate Q [m³/h] at P_2 [bar]			
P_1	0,5	1	1,2	1,5
1,5 bar	12	12	12	12

Performance factor L_{10} = 7.5

Article number

U23-AC-1,5-1,5	717 07968

Data sheet DES U23AC - Edition 0126
Subject to alteration without prior notice
© Spectron Gas Control Systems GmbH
info@spectron.de www.spectron.de

spectron Gas Control Systems