Tapping points EM55

spectrolab

Tapping points EM55-4

Dimensions EM55-1

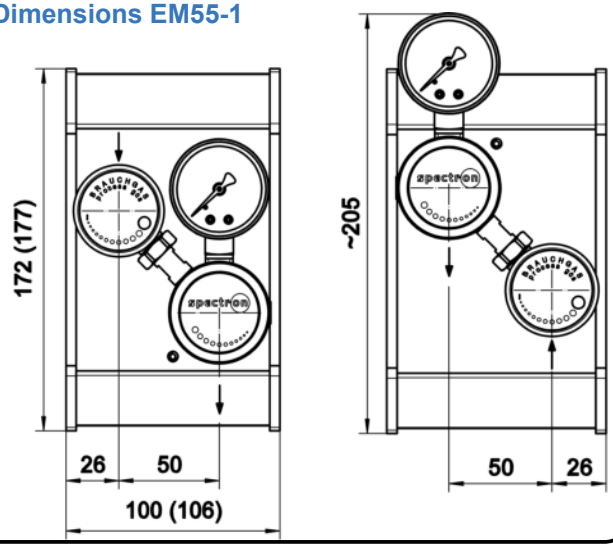

Product features

- Wall-mounting tapping points
- For non-corrosive gases up to quality 6.0
- Laboratory-style design
- Ergonomically designed
- Filter at the process gas inlet valve
- Diaphragm-type shut-off valves optimised for low internal volume with On/Off position indicator
- Suitable for ECD-applications
- Pressure regulator with high control accuracy
- Designed for easy installation
- Approved for use with oxygen
- Tapping point can be extended into multiple tapping points
- Top-inlet or bottom-inlet configurations available

Technical data

Inlet pressure P_1	max. 200 bar
Outlet pressure P_2	1,5 / 4 / 10 / 20 / 50 bar
Materials	
Body regulator and valve:	Chrome-plated brass
Valve seat regulator:	PA
Valve seat valve:	PVDF
Diaphragm regulator:	Hastelloy C276
Diaphragm valve:	Hastelloy C276
Soft goods:	FKM
Filter:	Stainless steel 1.4404
Connectors	1/4”-NPT female
Temperature range	-20°C to +60°C
Leakrate (to atmosphere):	≤ 10^{-8} mbar l/s He
(via valve seat):	≤ 10^{-6} mbar l/s He
Pressure gauge	Safety pressure gauge ISO5171/KI1.6/NG50
Weight	2,5 kg

Flow curves EM55

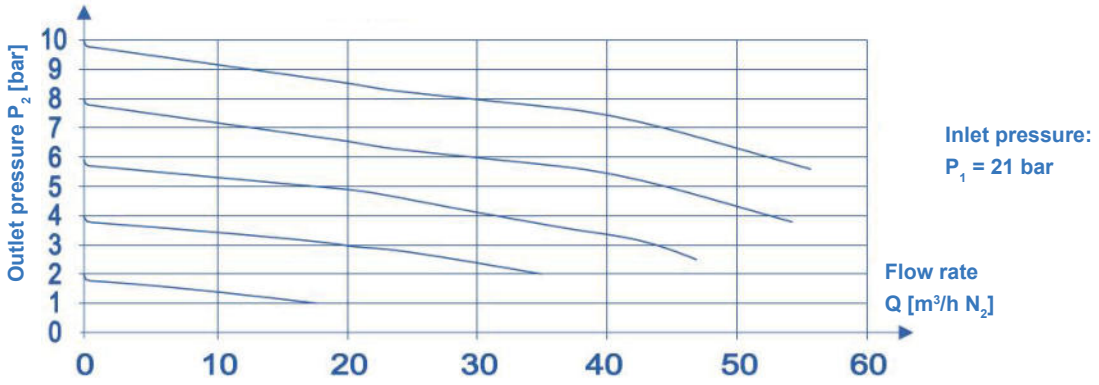

Subject to alteration without prior notice
© Spectron Gas Control Systems GmbH
info@spectron.de www.spectron.de

spectron Gas Control Systems

Tapping points EM55

spectrolab

Dimensions EM55-1 ... 4

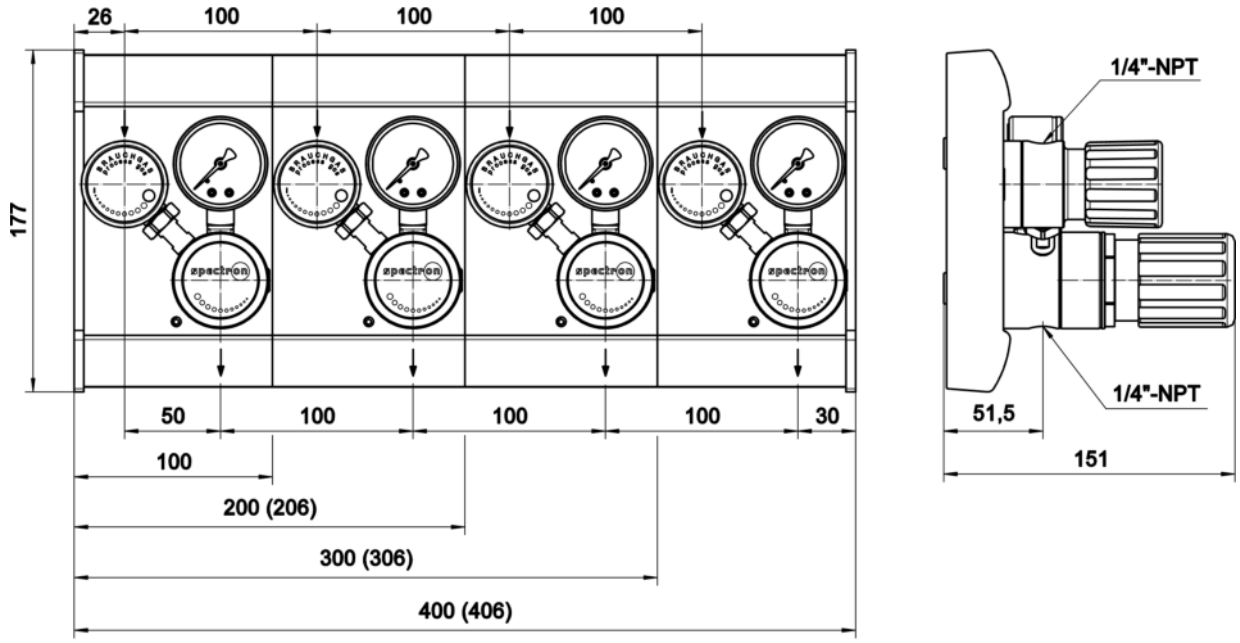

Ordering information: Tapping points EM55

EM55 - 1 - 40 - 10 - O - Gas

Type

1	single tapping point
2	double tapping point
3	triple tapping point
4	4 tapping points

Inlet pressure P_1

40	40 bar
100	100 bar
200	200 bar

Type of gas

Please specify type of gas for selection of sealing materials

Inlet

O	top inlet
U	bottom inlet

Outlet pressure P_2

1,5	1,5 bar
4	4 bar
10	10 bar
20	20 bar
50	50 bar

Higher outlet pressure upon request

Subject to alteration without prior notice
© Spectron Gas Control Systems GmbH
info@spectron.de www.spectron.de

spectron Gas Control Systems